Node detail

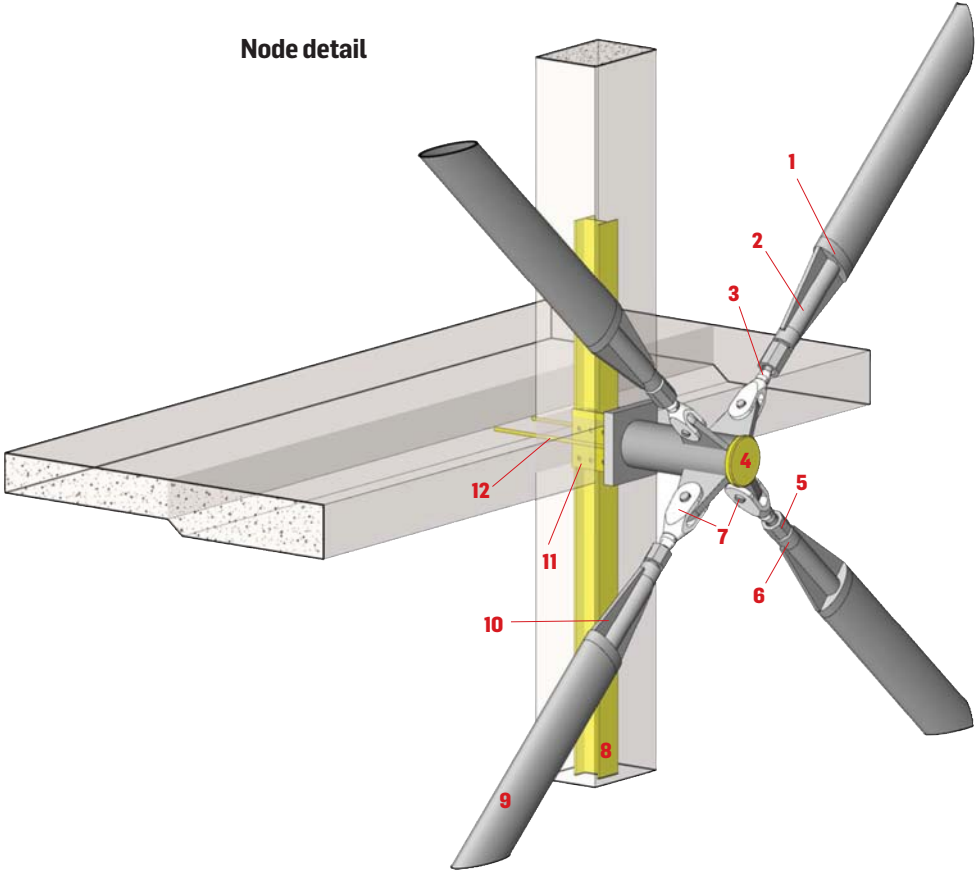

1 Brace end plate
2 Threaded receiver socket
3 Fork end lock cover
4 Spindle
5 Threaded torsion bars
6 Brace end lock cover
7 Fork and pin
8 Embedded steel stanchion
9 Oval hollow section brace
10 Tapered stiffener
11 Cheek plate to embedded section
12 Threaded anchor bars